BIG BIKE PARTS® INSTALLATION INSTRUCTIONS

Copyright© 2007 by Big Bike Parts, Inc. No part of this instruction sheet may be reproduced without the written permission of Big Bike Parts, Inc.

PART NO. 16-133A & 16-133R LICENSE PLATE HOLDER 4" X 7" MOTORCYCLE PLATES

Revised 05/06/08

TOOLS NEEDED: 2MM ALLEN WRENCH 2.5MM ALLEN WRENCH 8MM WRENCH SMALL ADJUSTABLE WRENCH THREADLOCKER

NOTE: WE RECOMMEND USING THREADLOCKER ON ALL HARDWARE INSTALLED.

INSTALLATION:
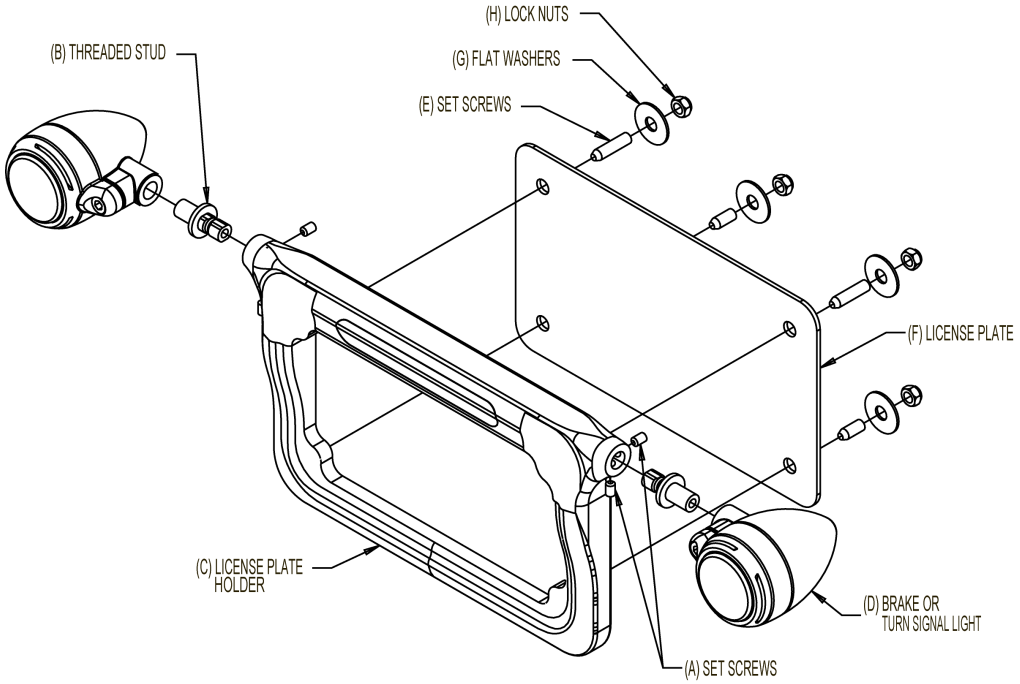
1. USING THE 2MM ALLEN WRENCH LOOSEN THE TWO SET SCREWS (A) HOLDING EACH THREADED STUD (B) INTO THE LICENSE PLATE HOLDER (C).
2. WITH THE SMALL ADJUSTABLE WRENCH TIGHTEN THE THREADED STUDS (B) INTO THE BRAKE OR TURN SIGNAL LIGHTS (D) ROUTING THE WIRES THROUGH THE THREADED STUD (B).
3. REINSTALL THE THREADED STUDS (B) WITH THE ATTACHED BRAKE OR TURN SIGNAL LIGHTS (D) IN REVERSE ORDER OF STEP ONE MAKING SURE THE LIGHTS WILL BE FACING BACK AND PARALLEL TO THE GROUND ONCE INSTALLED ON THE BIKE.
4. USING THE 2.5MM ALLEN WRENCH, SCREW THE FOUR SET SCREWS (E) INTO THE FOUR HOLES ON THE BACK OF THE LICENSE PLATE HOLDER (C). MAKE SURE THE TWO LONGER SCREWS ARE IN THE HOLES THAT WILL ALIGN WITH THE LICENSE PLATE BRACKET ON THE BIKE.
5. PLACE THE LICENSE PLATE (F) ONTO THE FOUR SET SCREWS (E) SO THAT THE LIGHTS ARE AT THE TOP OR BOTTOM (YOUR PREFERENCE). MAKE SURE THE WIRES ARE TUCKED INTO THE CHANNEL IN THE BACK OF THE LICENSE PLATE HOLDER (C).
6. SET THE LICENSE PLATE HOLDER (C) AND LICENSE PLATE (F) ONTO THE OEM LICENSE PLATE BRACKET ON THE BIKE. THIS WILL REQUIRE THE TOP TWO OR THE BOTTOM TWO SET SCREWS (E) TO BE PLACED INTO THE MOUNTING HOLES ON THE OEM BRACKET.
7. WITH THE LICENSE PLATE HOLDER (C), LICENSE PLATE (F), AND BRACKET ASSEMBLED TOGETHER TAKE THE FLAT WASHERS (G) AND PLACE THEM ON THE SET SCREWS (E). THREAD THE FOUR 5MM LOCK NUTS (H) ONTO THE SET SCREWS (E). CENTER THE UNIT AND TIGHTEN WITH A 8MM WRENCH.
8. CONNECT THE THREE WIRES FOR THE LICENSE PLATE HOLDER (C) AS FOLLOWS: BLUE TO RUNNING, RED TO BRAKE, AND BLACK TO GROUND. CRIMP THE MALE SPADE CONNECTORS TO THE LICENSE PLATE HOLDER (C) WIRES AND CRIMP THE T-TAPS TO THE RUNNING, BRAKE, AND TURN WIRES IN THE TAIL LIGHT WIRE HARNESS.
9. TO WIRE THE BRAKE OR TURN SIGNAL LIGHTS (D) CONNECT THE RED WIRE TO YOUR POSITIVE SOURCE SUCH AS A TURN SIGNAL OR BRAKE WIRE AND WIRE THE BLACK TO GROUND. IF 16-133A IS PURCHASED THEY CAN ONLY BE WIRED AS TURN SIGNALS, IF 16-133R IS PURCHASED THEY CAN BE WIRED AS RUNNING, TURN, OR BRAKE LIGHTS, AND IF A 13-307 IS PURCHASED WITH EACH LIGHT THE 16-133R CAN BE CONVERTED TO RUNNING/TURN, RUNNING/BRAKE, OR TURN/BRAKE.
10. TEST FOR CORRECT OPERATION OF LED LIGHT.